NIF-71-FG

FLAT GLASS ICE CREAM FREEZER

Ideal for restaurants, convenience stores, supermarkets & cafeterias

FEATURES

Front temperature display & adjustable thermostat

Aluminum interior

Sliding flat glass doors

Four casters (2 swivel)

Wire ice cream tub baskets included

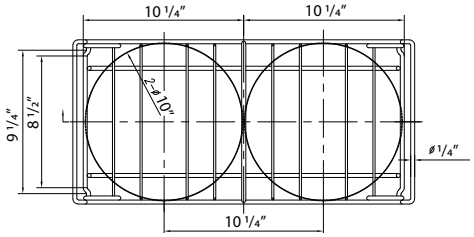

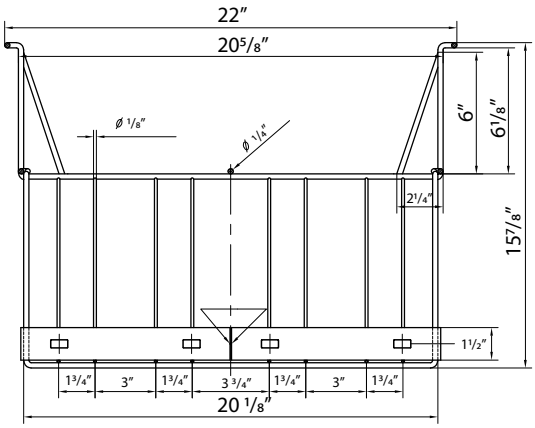

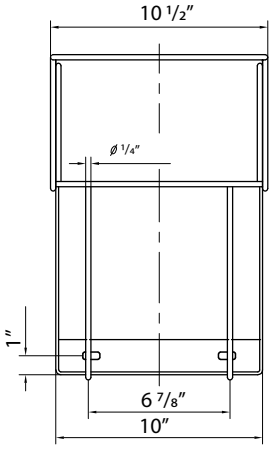

SPECIFICATIONS

Capacity (Cu. ft)	19.4
Capacity (Liters)	549L
Exterior Dimensions (in)	70 1/2" × 26 1/2" × 32 3/4"
Interior Dimensions (in)	54 1/2" × 20 7/8" × 25"
Nbr of wire baskets	6
Basket size	10 1/2" × 22" × 15 7/8"
Door(s)	Sliding (top)
Temp. Range	-18 TO -22°C
Ambiant Temperature	≤ 30°C
Ambiant Humidity	≤ 55%
Refrigerant (CFC-Free)	R290
Amperage (A)	2.9A
Voltage (V)	115V/60Hz
Plug Type	NEMA 5-15P

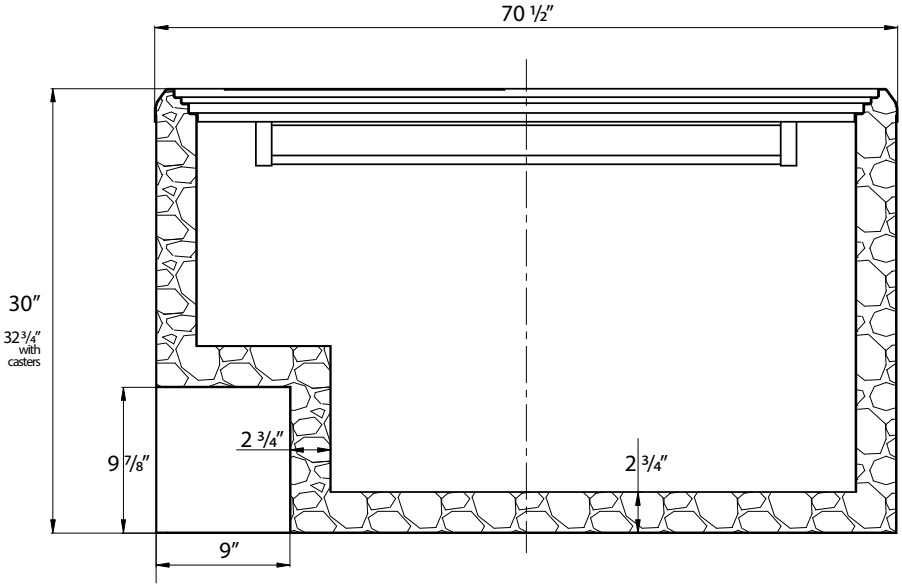

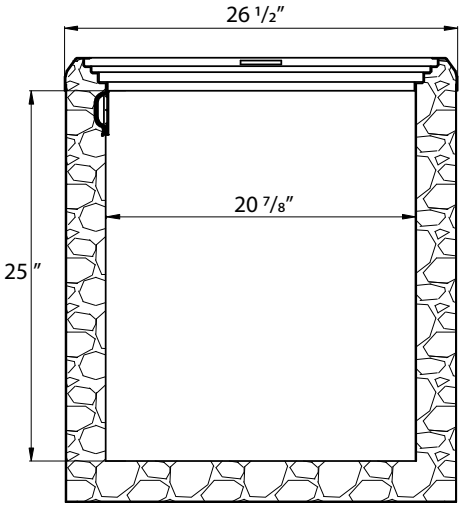

NEW AIR

*Design and specifications may change without prior notice for product improvement

CUSTOMER SUPPORT

1-800-567-3620

NEWAIRREFRIGERATION.CA