NIF-61-CG

CURVED GLASS ICE CREAM FREEZER

Ideal for restaurants, convenience stores, supermarkets & cafeterias

FEATURES

- Side temperature display & adjustable thermostat
- Aluminum interior
- Sliding curved glass door
- Four casters (2 swivel)
- Wire baskets included

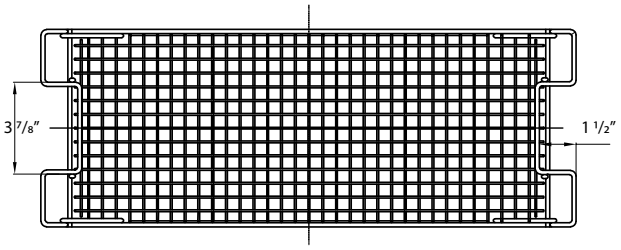

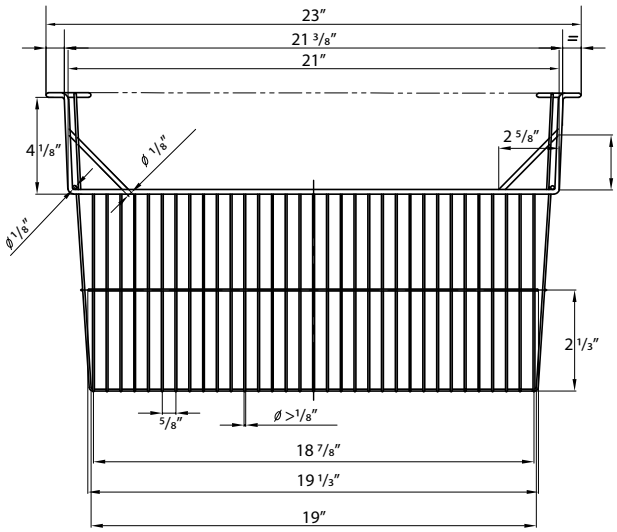

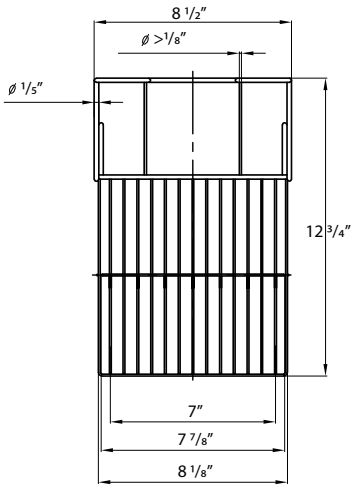

SPECIFICATIONS

Capacity (Cu. ft)	13.94
Capacity (Liters)	395
Exterior Dimensions (in)	61” × 27 3/4” × 33 3/4”
Interior Dimensions (in)	55” × 21 1/2” × 25 1/2”
Net Weight (kg/lbs)	72 / 158.7
Nbr of wire baskets	6
Basket size	23” × 8 1/2” × 12 3/4”
Door(s)	Sliding (top)
Temp. Range	≤ -22°C
Ambiant Temperature	≤ 30°C
Ambiant Humidity	≤ 55%
Refrigerant (CFC-Free)	R290
Amperage (A)	2.9A
Voltage (V)	115V/60Hz
Plug Type	NEMA 5-15P

Intertek

NEMA 5- 15P

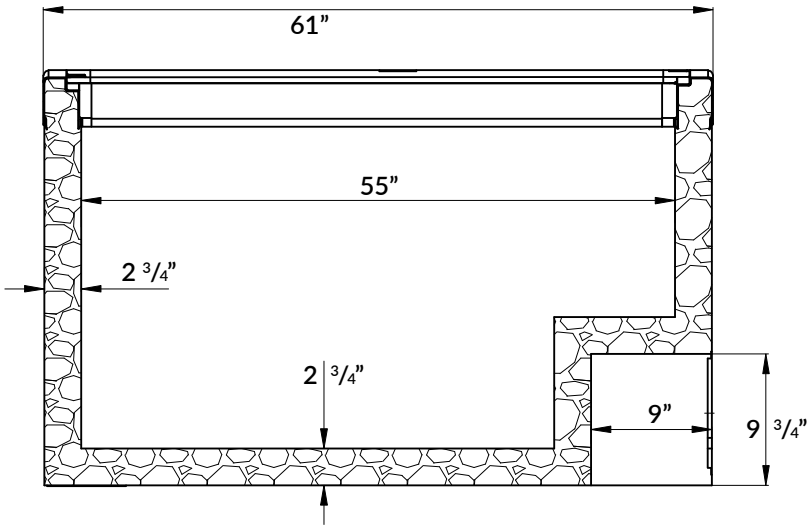

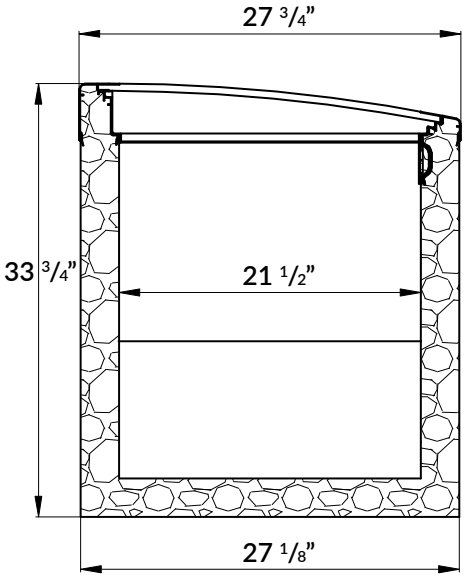

NEW AIR

*Design and specifications may change without prior notice for product improvement

CUSTOMER SUPPORT

1-800-567-3620

NEWAIRREFRIGERATION.CA