# NIF-50-FG

## FLAT GLASS ICE CREAM FREEZER

Ideal for restaurants, convenience stores, supermarkets & cafeterias

## FEATURES

- Front temperature display & adjustable thermostat
- Aluminum interior
- Sliding flat glass doors
- Four casters (2 swivel)
- Wire ice cream tub baskets included

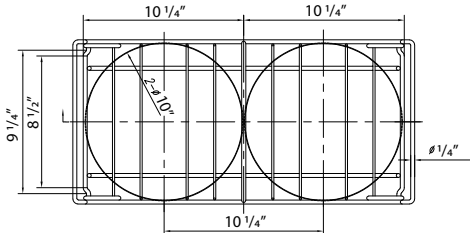


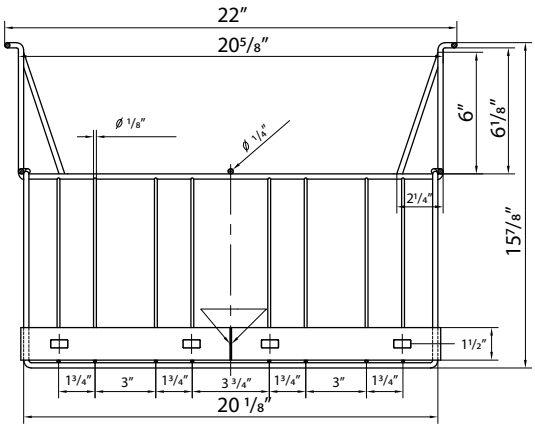


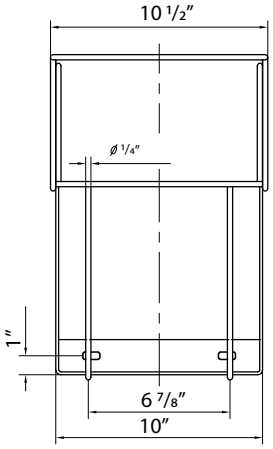


NEWAIRREFRIGERATION.CA
2025

# SPECIFICATIONS

| | |
|---|---|
| Capacity (Cu. ft) | 12.9 |
| Capacity (Liters) | 365L |
| Exterior Dimensions (in) | 50" × 26 1/2" × 32 3/4" |
| Interior Dimensions (in) | 44 1/2" × 20 7/8" × 25" |
| Nbr of wire baskets | 4 |
| Basket size | 10" × 20" × 9 1/2" |
| Door(s) | Sliding (top) |
| Temp. Range | -18 TO -22°C |
| Ambiant Temperature | ≤ 30°C |
| Ambiant Humidity | ≤ 55% |
| Refrigerant (CFC-Free) | R290 |
| Amperage (A) | 2.3A |
| Voltage (V) | 115V/60Hz |
| Plug Type | NEMA 5-15P |

NEMA 5- 15P

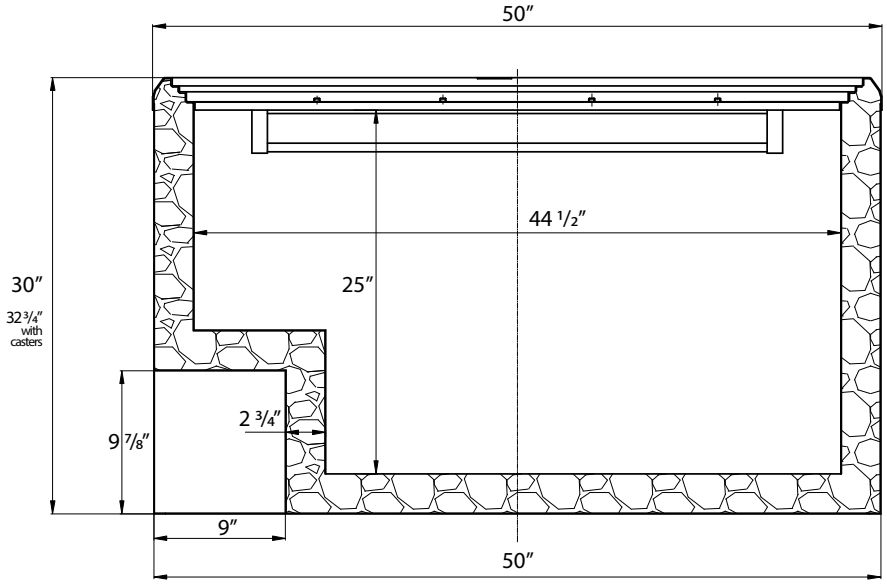


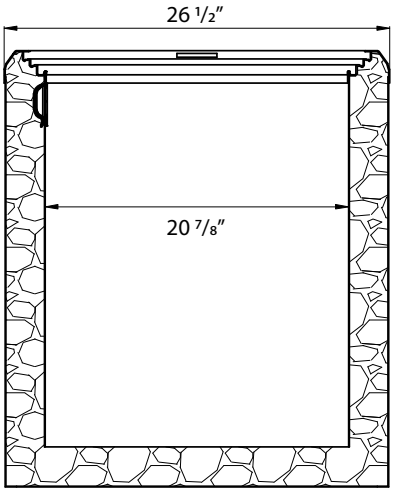


NEW AIR

*Design and specifications may change without prior notice for product improvement

CUSTOMER SUPPORT

1-800-567-3620

NEWAIRREFRIGERATION.CA