RV1

NIF-50-DC

FLAT GLASS ICE CREAM FREEZER WITH SNEEZE GUARD CANOPY

Ideal for restaurants, convenience stores, supermarkets & cafeterias

FEATURES

- Front temperature display & adjustable thermostat
- Aluminum interior
- Sliding flat glass doors
- Four casters (2 swivel)
- Wire ice cream tub baskets included

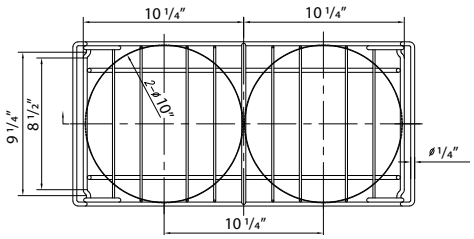

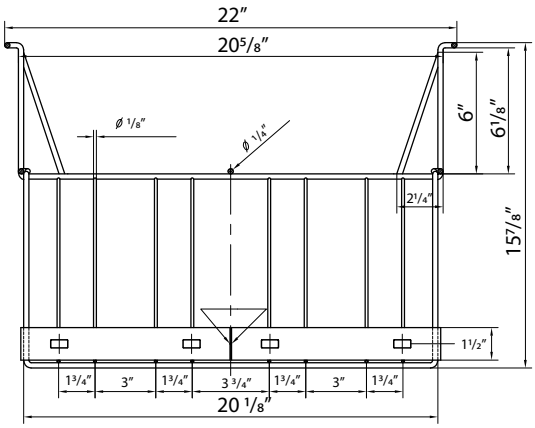

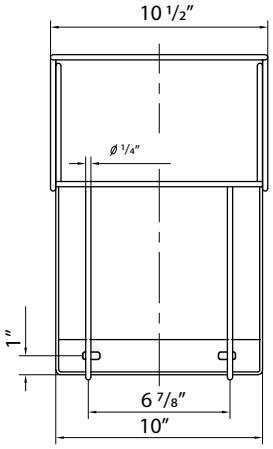

SPECIFICATIONS

Capacity (Cu. ft)	12.9
Capacity (Liters)	365L
Exterior Dimensions (in)	50" × 26 1/2" × 51 1/8"
Interior Dimensions (in)	44 1/2" × 20 7/8" × 25"
Nbr of wire baskets	4
Basket size	10" × 20" × 9 1/2"
Door(s)	Sliding (top)
Temp. Range	-18 TO -22°C
Ambiant Temperature	≤ 30°C
Ambiant Humidity	≤ 55%
Refrigerant (CFC-Free)	R290
Amperage (A)	2.3A
Voltage (V)	115V/60Hz
Plug Type	NEMA 5-15P

Intertek

NATURAL REFRIGERANT R290 ECO-FRIENDLY

NEMA 5- 15P

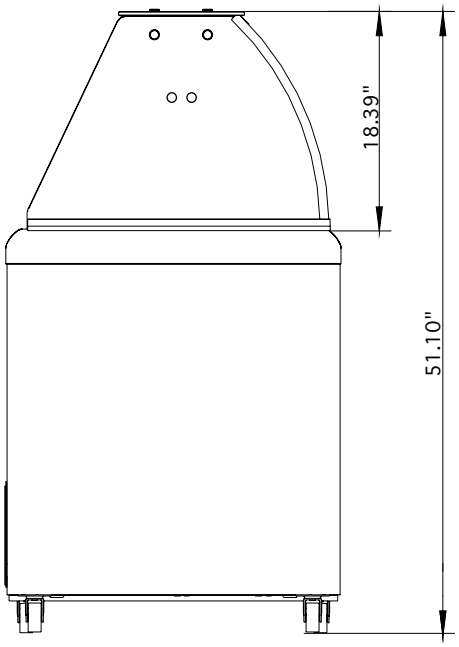

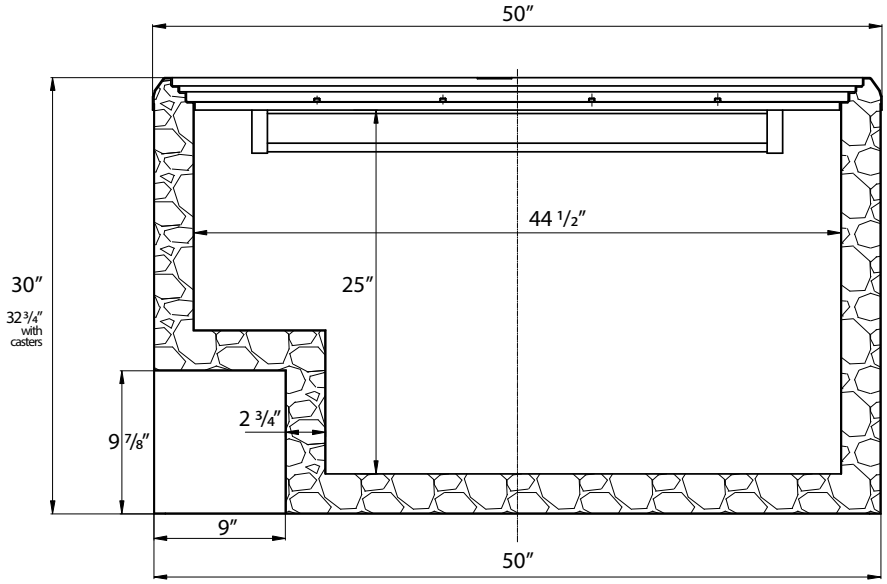

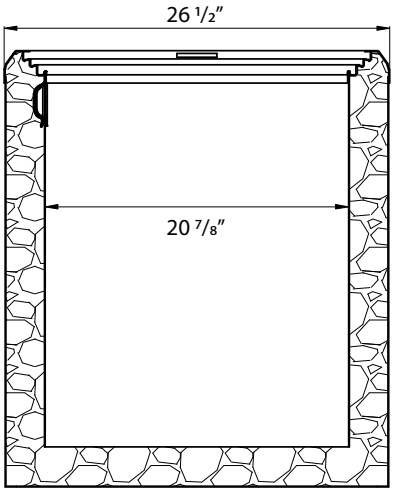

NEW AIR

*Design and specifications may change without prior notice for product improvement

CUSTOMER SUPPORT

1-800-567-3620

NEWAIRREFRIGERATION.CA