# NIF-29-FG

## FLAT GLASS ICE CREAM FREEZER WITH SNEEZE GUARD CANOPY

Ideal for restaurants, convenience stores, supermarkets & cafeterias

## FEATURES

Front temperature display & adjustable thermostat

Aluminum interior

Sliding flat glass doors

Four casters (2 swivel)

Wire ice cream tub baskets included

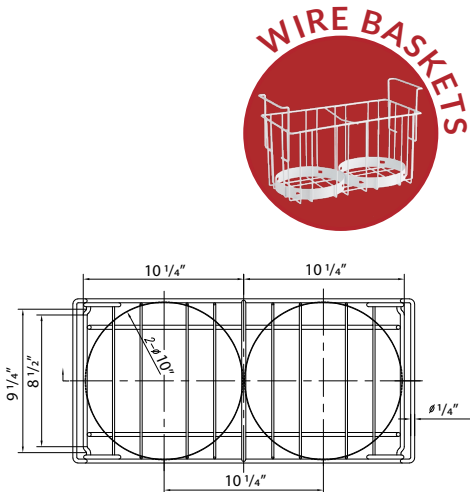


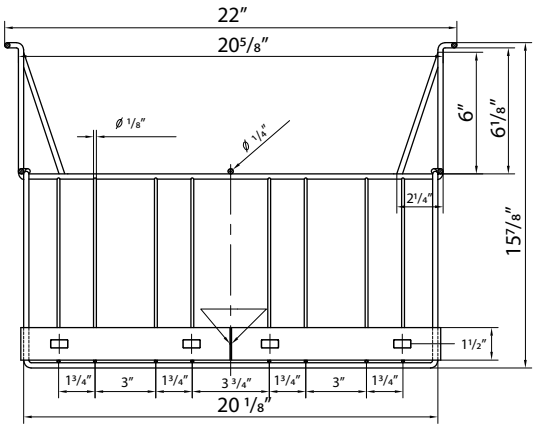


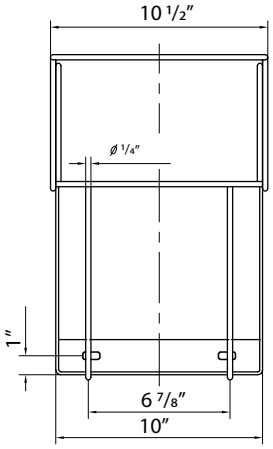

# SPECIFICATIONS

| | |
|---|---|
| Capacity (Cu. ft) | 5.83 |
| Capacity (Liters) | 165 |
| Exterior Dimensions (in) | 28 1/2" × 26 1/2" × 51 1/8" |
| Package Dimentions (in) | 30 1/3" × 30 3/4" × 34 1/4" |
| Nbr of wire baskets | 2 |
| Basket size | 20 3/8" × 13 3/4" × 10" |
| Door(s) | Sliding (top) |
| Temp. Range | -18 TO -22°C |
| Ambiant Temperature | ≤ 30°C |
| Ambiant Humidity | ≤ 55% |
| Refrigerant (CFC-Free) | R290 |
| Amperage (A) | 1.7A |
| Voltage (V) | 115V/60Hz |
| Plug Type | NEMA 5-15P |

Intertek

NATURAL REFRIGERANT R290 ECO-FRIENDLY

NEMA 5- 15P

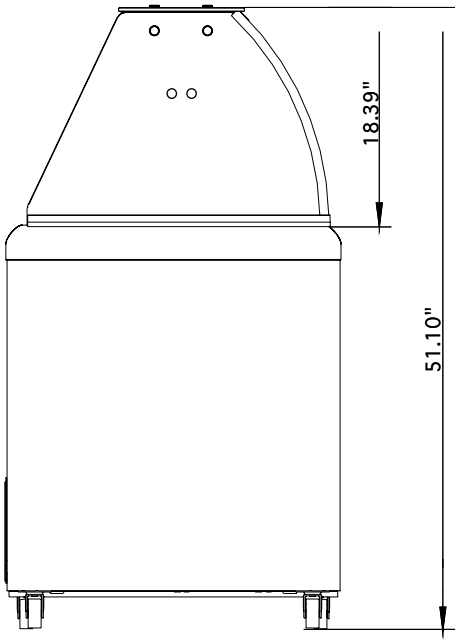


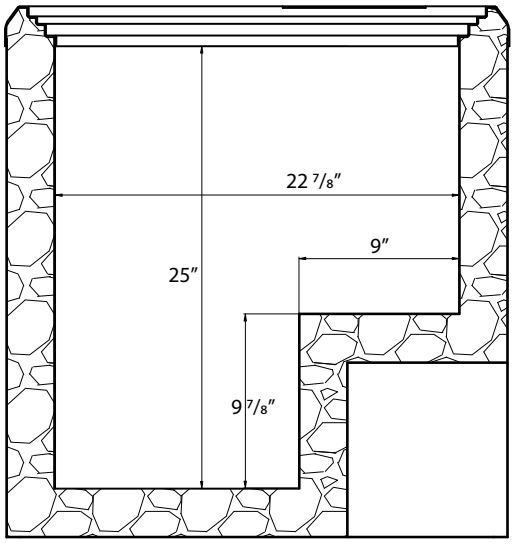


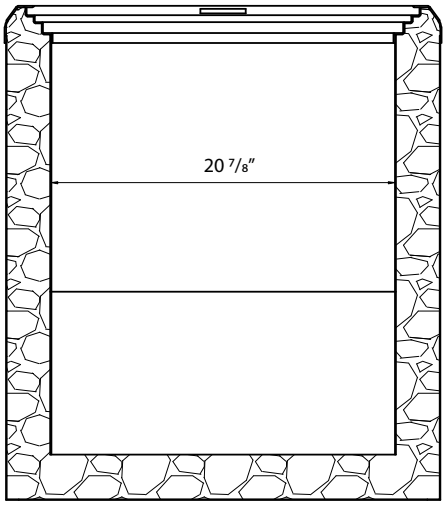


NEW AIR

*Design and specifications may change without prior notice for product improvement

CUSTOMER SUPPORT

1-800-567-3620

NEWAIRREFRIGERATION.CA