HABCO®

BUILT TO PERFORM. CRAFTED TO LAST.®

SE24HCSA

Single Solid Door Refrigerator



Specifications

Width*	Depth**	Height***	Shelves	Ship Weight	Ship Cube	Cooling Capacity	Electrical
23 7/8" 607 mm	31" 788 mm	78" 1982 mm	3	320 lbs 145.15 kg	46.68 cu.ft. 1.32 m^3	1/4 HP	115V/3.1 Amp/60 Hz - Single Phase - NEMA 5-15P, Dedicated Circuit

*Add 1.5" (38 mm) for casters. **Add 1" (26 mm) for power cord + 0.125" (3 mm) for door handle. ***Add 121 mm or 4.75" for casters.

Premium Features

- Automatic Stainless Steel Condensate Control System
- Cassette® Refrigeration
- Free & Clear Condenser Coil
- HABCO Insulated Glass
- LED
- ProductTemp™
- Digitally Controlled
- Front Breathing Refrigeration
- Priority Air-Flow

SINGLE SOLID DOOR REFRIGRATOR

Specifications subject to change without notice. Refer to website for most current information.

HABCO® BUILT TO PERFORM. CRAFTED TO LAST.®

SE24HCSA: Designed to enhance the refrigerated storage or display experience to the highest standards of quality and performance.

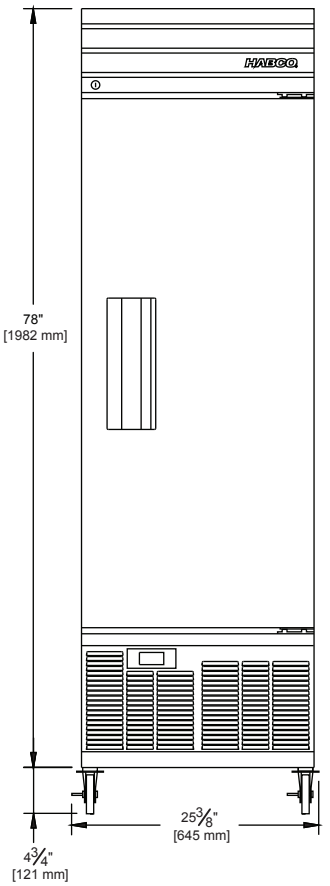

Refrigeration:

- Self contained Cassette® forced-air refrigeration employs R290 hydrocarbon Natural Refrigerant within a sealed capillary tube system.
- Cassette® refrigeration is bottom-mounted and removable from the front for ease of maintenance.
- Refrigeration may be exchanged or upgraded without mechanic. Designed to operate at a set point between 34°F to 39°F (1°C - 4°C).
- Priority, directed air flow provides optimum cooling and energy efficiency within cabinet and exclusively at front of unit for optimized heat exchange ventilation.
- Finless, Free&ClearTM Condenser Coil maximizes air-flow over the compressor, reduces energy consumption and is non-clogging.
- Corrosion resistant coated evaporator coil.
- Automatic, stainless steel condensate control system.
- Peak performance with EC motors designed for energy savings and superior performance.
- Equipped with ProducTemp™ Energy Efficient Digital Controller featuring visual/audible product-protection alarm.
- Controls refrigeration and displays according to simulated average product temperature to a display resolution of 1°C.

Cabinet:

- Exterior – stainless steel front and sides.
- Stainless Steel Interior with coved corners stands up to rigours of everyday wear and tear.
- Ergonomic raised interior floor.
- Space Saving Design – air ventilation exclusively from the front of unit.
- Insulation – cabinet and solid doors are foamed-in-place with eco-conscious, polyurethane insulation.
- 5” Swivel Caster Kit Included.

Doors:

- Stainless steel with large grip, recessed handle.
- Self Closing Swing Doors feature door locks and are reversible on-location.
- Magnetic gaskets are single piece bead-mount construction easily removable for cleaning.
- Door lock included is reversible on-location.

Lighting:

- Energy Efficient LED Lighting System for sparkling Illuminated Interior Display, on Switch.

Storage:

- Three (3) white coated shelves 19 1/2"W x 22 3/4"D (496mm x 578mm) are NSF approved.
- Heavy duty aluminum shelving pilasters will not peel or chip adjustment of 1/2" (13mm) increments.
- Interior accepts typical 18" x 26" (458mm x 661mm) sheet pans.
- NSF-7 compliant for storage and display of open food product.

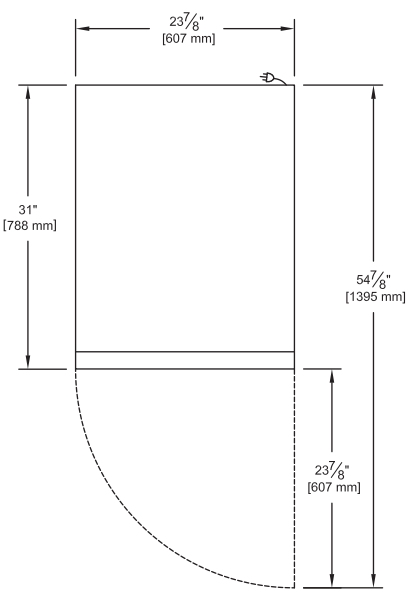

Electrical:

- Factory power cord installed for connection to a sole-use (dedicated) 115V/60Hz/1-Phase, 15 Amp circuit.

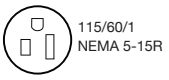

c UL us LISTED NSF CERTIFIED NATURAL

HABCO MANUFACTURING INC. 501 GORDON BAKER ROAD, TORONTO, ONTARIO, CANADA, M2H 2S6 TollFreeCAN:1-800-387-5398USA:1-800-448-0244 Fax:416-491-6982 www.habcomfg.com

©2017 HABCO Manufacturing Inc. HABCO is a registered trade mark of HABCO Manufacturing Inc. in Canada, USA, U.K. and Germany. HABCO logo design, Built to Perform. Crafted to Last. and CASSETTE are registered trademark of HABCO Manufacturing Inc. in Canada and U.S.A. Additional trade marks may be employed by HABCO and have been duly noted with respective registration mark or trade mark symbol. DOMESTIC AND INTERNATIONAL PATENTS.