QUALITY COFFEE SYSTEMS
WHERE THE PROOF IS IN THE CUP

X-ONE TCI



COHERENT, ERGONOMIC & EXACTING





Nestled quietly within the heart of Monaco is our small, but perfectly formed factory, hand-crafting espresso machines since 1956. We combine a genuine passion for innovation and coffee excellence, with exceptional quality and reliability to produce the finest machines for any circumstance or environment.

www.qualitycoffeesystems.ca

QUALITY COFFEE SYSTEMS
WHERE THE PROOF IS IN THE CUP

X-ONE TCI







Our giant slayer, the X-ONE TCI model utilises some simple proprietary technology to offer some of the unique and desirable features of premium multi boiler machines.

Built around the success and design principles of the X-ONE range, we have included several intuitive improvements which make the X-ONE TCI one of the best performing single boiler machines on the market, now with full colour coded body panels – this machine's iconic style really sets off any coffee bar.

This machine really can handle the most demanding situation, pouring perfect espresso over and again, whilst allowing the barista to manually and intuitively adjust numerous parameters to dial in the flavour of any bean, to bring out even the most subtle tasting notes of your coffee, whatever the region or roast profile of your beans.

Temperature Control Improvement (TCI)

The stand-out feature of the X-ONE TCI, giving full and independent temperature control of each group, allowing you to optimise the extraction of your coffee, and offer a guest espresso at a different brewing temperature, giving you total control of extraction. Our cold-water injection system allows you to maximise the efficiency of the steam boiler, increasing capacity, and providing continuous steam, whilst providing a stable temperature at the group, the steam boiler and coffee network perform with perfect synergy all day.

Flow Control

The X-ONE TCI achieves incredible temperature stability, using our unique 'flow control' system, allowing you to make small adjustments to the temperature of the coffee group, together with the PID heating control, this ensures that your espresso is extracted efficiently and consistently time and again.

Ergonomics and Design

The X-ONE TCI model features several upgrades over its X-ONE sibling. The aesthetics of the machine have been tweaked to includes additional colour coding, LED highlights and chromed accents in the side panels and steam actuators.

Additional Features:

Shot Timers
Measure the extraction benchmark shot after shot, ensuring performance is controlled and monitored in service.

Auto On/Off
Programme your machine to automatically switch to Eco mode during quieter periods, overnight or even when you are closed for a day, then back on before service begins, saving staff and electricity costs and prolonging life of machine components.

Adjustable Hot Water Temperature
Fine tune your entire drinks portfolio to use the machine water reservoir to make that perfect Long Black or Americano.

Precision Pre-Infusion
Change coffees and doses without fear, by adjusting both, volume of pre-brew and bloom period, better extractions are simplicity themselves.

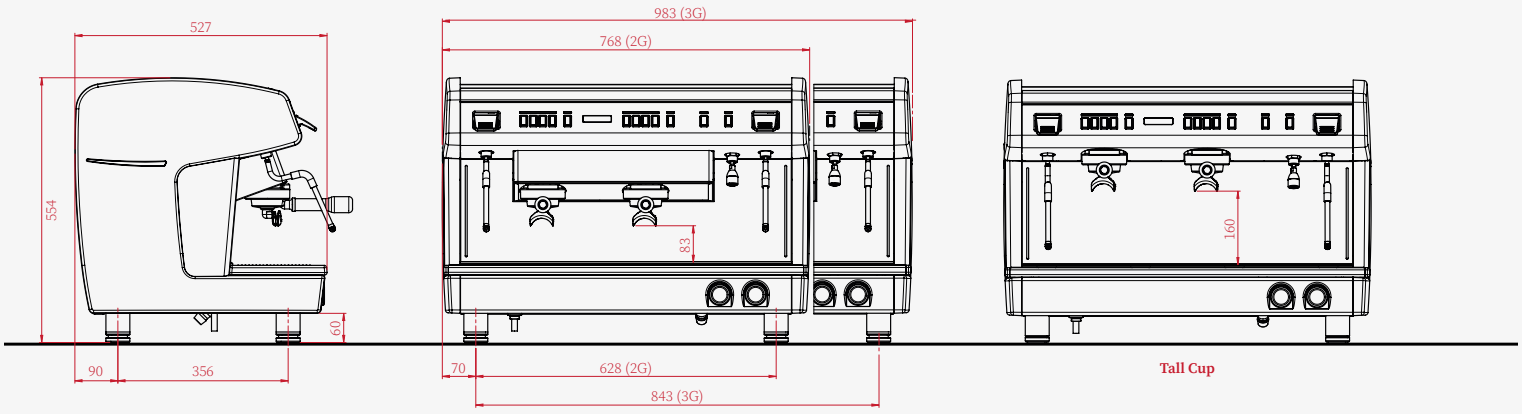

	2 Group	3 Group
Height (mm)	554	554
Width (mm)	768	983
Depth (mm)	527	527
Weight (kg)	60	76
Steam Boiler Size (Litres)	13	20
Coffee Boiler Size (Litres)	n/a	n/a
Group Element (W)	n/a	n/a
Steam Boiler Element (W)	4200 (option 3500)	6000 (option 4700)
Coffee Boiler Element (W)	n/a	n/a
Total Power (W)	4500 (option 3800)	6300 (option 5000)
Voltage (V)	400 (option 230)	400 (option 230)

Colour Options:

- Jet Black
- Traffic White
- Carmine Red

QUALITY COFFEE SYSTEMS
WHERE THE PROOF IS IN THE CUP

Quality Coffee Systems Corp.
Email: info@qualitycoffeesystems.ca
Tel: 604-291-6166 | T.f 1-877-461-4445
www.qualitycoffeesystems.ca

1122 Boundary Road
Burnaby, BC V5K 4T5
Canada